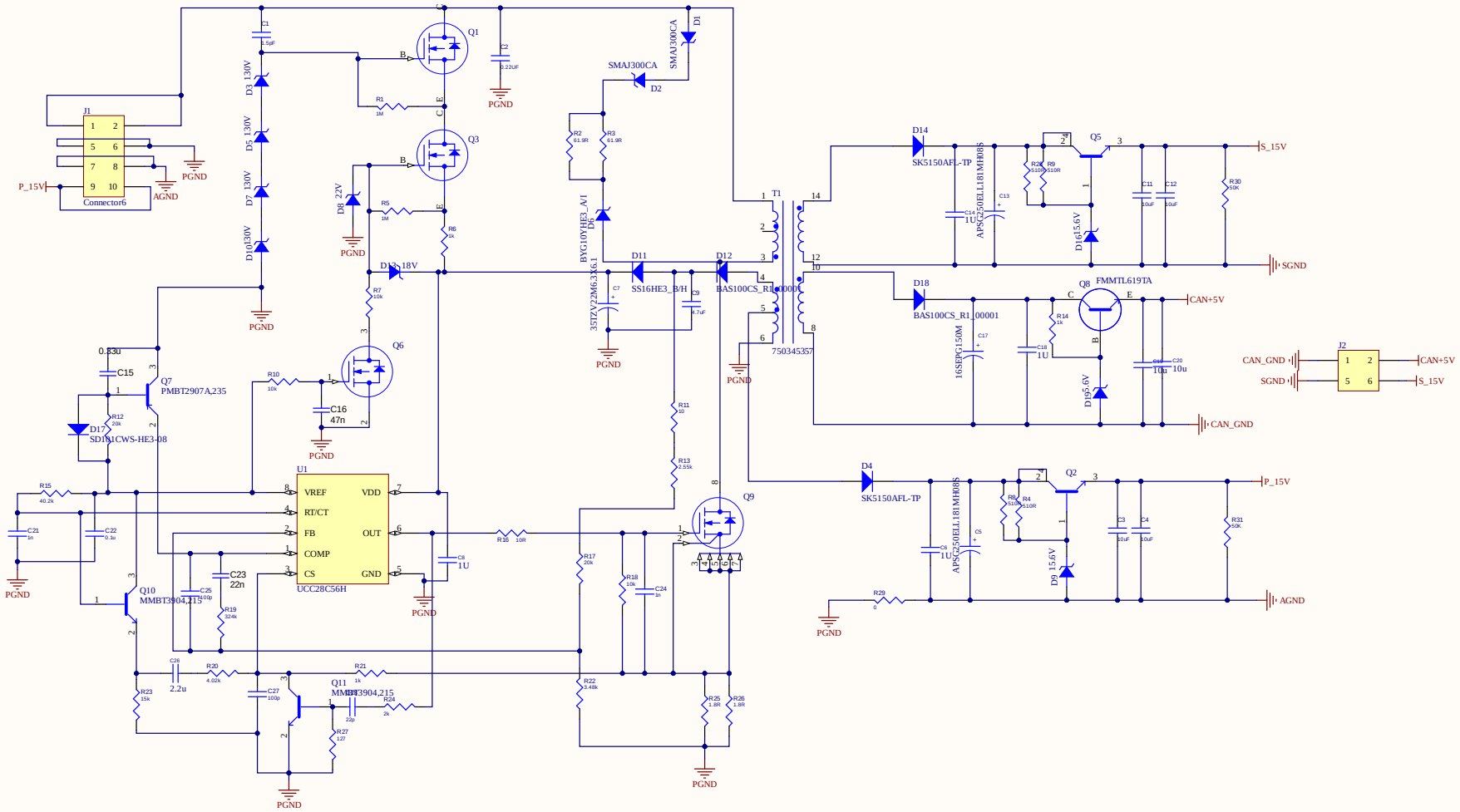

Wolfspeed

Title: -

Drawing No: *

Date: -

Revision: -

Sheet: 1 of 1